Experiment 11

Electron Diffraction

Objective	Materials Used
To observe and measure emission spectral lines and to determine the Rydberg constant.	Gas tube and power supply, Pasco Atomic Spectra equipment, Capstone Interface

Introduction

In 1924, French physicist Louis de Broglie first postulated that wave nature is inherent in all physical phenomena. Since light has both wave and particle properties, de Broglie argued that objects we normally consider particles (like electrons) should also possess wave properties. This revolutionary idea is captured in a simple relation:

$$\lambda = \frac{h}{p} = \frac{h}{mv}$$

where h is Planck's constant and mv is the linear momentum of the particle. For an object like an electron (10^{-30} kg) to have an easily detectable wavelength (10^{-10} m), it must move relatively slowly (10^{7}m/s). The physicists who first demonstrated the wave nature of an electron beam found it accidentally. Two Americans, Clinton Davisson and Lester Germer, working for Western Electric company in 1927, were studying the crystalline surface structure of nickel when they inadvertently proved that de Broglie was correct.

When X-rays strike a crystal, most of them go right on through. A small amount will, however, reflect off a plane of atoms, obeying the law of reflection. Reflected X-rays from adjacent atomic layers can undergo constructive interference. By moving an X-ray detector along a circular arc, one can detect interference maxima and minima. Even though this is an interference phenomenon, it has historically been labelled "diffraction".

Davisson and Germer did essentially the same thing using electrons. By detecting the interfering electrons along a circular arc, they saw that the pattern resembled that produced by X-rays, suggesting that the electrons do indeed possess a wavelength. The figure below shows their setup. Most of the electrons striking the nickel go right on through, but a few undergo constructive interference and are picked up by the detector.

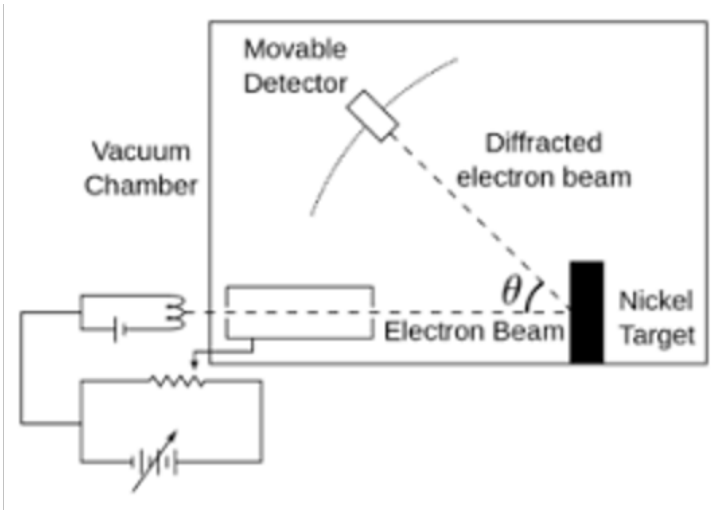

Figure 11.1: Electron Diffraction Diagram

You will create a diffraction pattern, but instead of nickel you will use a graphite (carbon) crystal. The known hexagonal structure of graphite is shown below. The spacing between neighboring atoms in the crystal is $d_{11} = 0.123$ nm and $d_{10} = 0.213$ nm. (The subscripts refer to what are called the Miller indices of the crystal.)

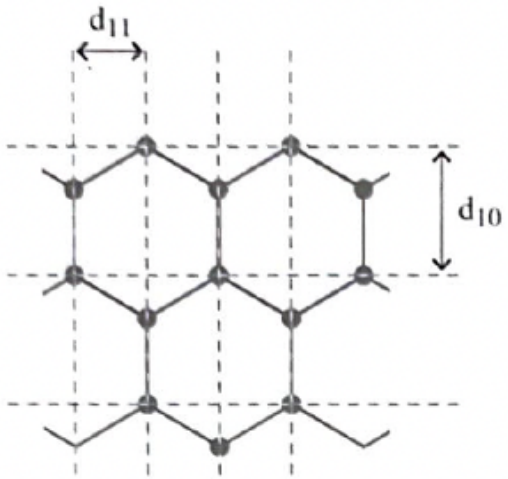

Figure 11.2: Atomic Structure of Carbon

Theory

The diffraction maxima are given by:

$$d\sin(\theta) = m\lambda$$

For this experiment, we will observe just the first maximum, $m = 1$.
The kinetic energy of the electron is:

$$\frac{p^2}{2m} = e\Delta V_a$$

where ΔV_a is the accelerating potential. Solving for the linear momentum mv and combining it with the diffraction equation yields:

$$p = \sqrt{2m_e e\Delta V_a}$$

therefore, the electron's wavelength is:

$$\lambda = \frac{h}{\sqrt{2m_e e\Delta V_a}} = d\sin(\theta)$$

Again using the small angle approximation:

$$\lambda = d\theta = \frac{h}{\sqrt{2m_e e\Delta V_a}}$$

The angle can be found using the figure below:

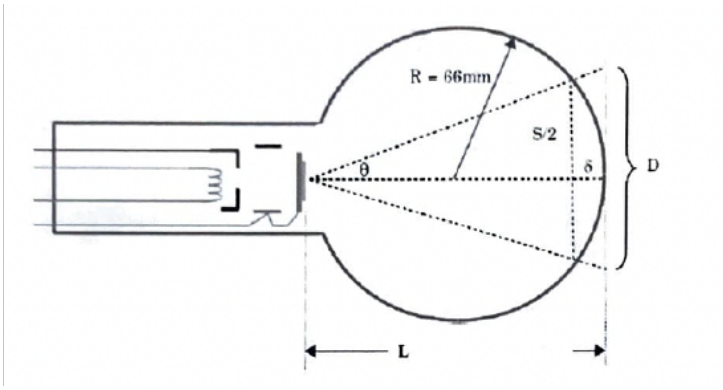

Figure 11.3: Electron Diffraction Angle

$$\tan(\theta) = \theta = \frac{D}{2L}$$

A linear relationship between ΔV_a and D can be found by combining the above equations:

$$\Delta V_a^{-0.5} = \left(\frac{d\sqrt{2m_e e}}{2hL}\right) D$$

D is the value required for the experiment. However, in practice we are measuring the distance S as shown above. D can be calculated from S using similar triangles to get the following result:

$$D = \frac{SL}{L - \delta}$$

In this experiment, $\delta = 2$ mm and $L = 125$ mm.

Procedure

1. With the high voltage set to a minimum, turn on the high-voltage power supply. This also supplies the filament voltage to the electron diffraction tube. Wait about a minute to allow the cathode to heat stabilize.

2. Set the bias voltage to about 6 V. This is the default value of the power supply.

3. Adjust the high voltage to 4,000 V while making sure that the anode current does not exceed 0.15 mA. You should be able to see two rings on the face of the tube caused by the diffracted electron beam. Variation of the anode voltage causes a change in diameter, a decrease in voltage resulting in an increase in diameter.

4. Starting with the anode voltage at 2,500 V, carefully measure the inner and outer ring diameters. Repeat the procedure at 500 V intervals until you reach the maximum of 5,000 V.

5. You will need to extrapolate the ring diameters using the diagram below in order to compensate for the curvature of the globe and the thickness of the glass. This step becomes most important when the ring diameters are large at low voltage.

6. Fill in the table:

ΔV_a (V)	S (m) inner	D (m) inner	S (m) outer	D (m) outer
2,500				
3,000				
3,500				
4,000				
4,500				
5,000				

7. Plot $\Delta V_a^{-0.5}$ versus D for each of the inner and outer rings. Find the slope of each line.

8. The inner ring should have the larger slope and it represents diffraction from the d_{10} plane; the outer ring represents diffraction from the d_{11} plane.

Conclusion

Use the slope to find the crystal spacing distances and compare them to the known values.